ITEM	PART NO.	DESCRIPTION	XP2020	XP2025	XP2030	XP2040	XP2525	XP2530	XP2540	XP3030	XP3040	XP4040
1	XPU01	PLATE, CROSSOVER, 1.9-3.5" X 1.9-3.5" OD	1	1	1	-	1	1	-	1	-	-
1	XPU02	PLATE, CROSSOVER, 1.9-4.5" X 1.9-4.5" OD	-	-	-	1	-	-	1	-	1	1
2	GUB4240	1/2"-13 UNC X 2-1/2" X 4" GALV U-BOLT	4	2	2	-	-	-	-	-	-	-
3	GUB4352	1/2"-13 UNC X 3" X 5-1/4" GALV U-BOLT	-	2	-	-	4	2	-	-	-	-
4	GUB4355	1/2"-13 UNC X 3-5/8" X 5" GALV U-BOLT	-	-	2	-	-	2	-	4	-	-
5	GUB52440	5/8"-11 UNC X 2-1/2" X 4" GALV U-BOLT	-	-	-	2	-	-	-	-	-	-
6	GUB5456	5/8"-11 UNC X 4-5/8" X 6-1/2" GALV U-BOLT	-	-	-	2	-	-	2	-	2	4
7	GUB53045	5/8"-11 UNC X 3" X 4-1/2" GALV U-BOLT	-	-	-	-	-	-	2	-	-	-
8	GUB53560	5/8"-11 UNC X 3-5/8" X 6" GALV U-BOLT	-	-	-	-	-	-	-	-	2	-

REVISIONS				
REV.	ZONE	DESCRIPTION	BY	DATE
A		INITIAL RELEASE	ACG	08/29/18

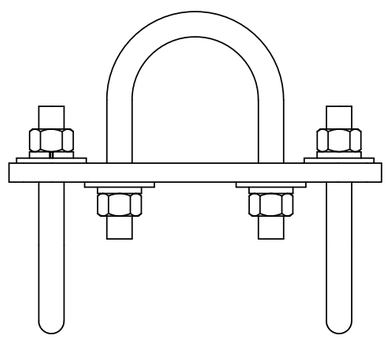

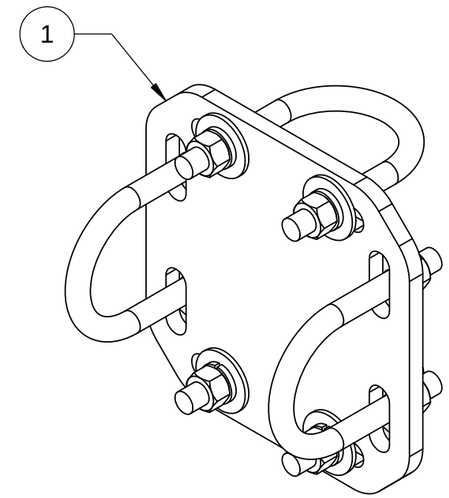

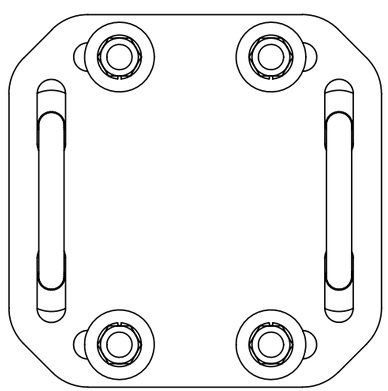

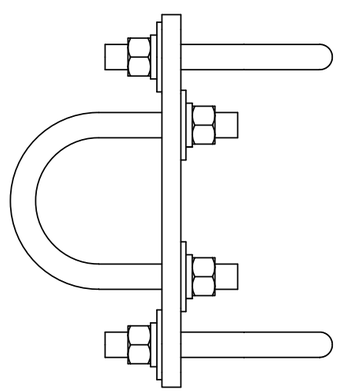

Part No.	Description	Weight
FM-XP2020	CROSSOVER PLATE, 2-3/8" O.D. PIPE TO 2-3/8" O.D. PIPE	7.79 LBS
FM-XP2025	CROSSOVER PLATE, 2-3/8" O.D. PIPE TO 2-7/8" O.D. PIPE	8.10 LBS
FM-XP2030	CROSSOVER PLATE, 2-3/8" O.D. PIPE TO 3-1/2" O.D. PIPE	8.08 LBS
FM-XP2040	CROSSOVER PLATE, 2-3/8" O.D. PIPE TO 4-1/2" O.D. PIPE	13.07 LBS
FM-XP2525	CROSSOVER PLATE, 2-7/8" O.D. PIPE TO 2-7/8" O.D. PIPE	8.41 LBS
FM-XP2530	CROSSOVER PLATE, 2-7/8" O.D. PIPE TO 3-1/2" O.D. PIPE	8.39 LBS
FM-XP2540	CROSSOVER PLATE, 2-7/8" O.D. PIPE TO 4-1/2" O.D. PIPE	13.29 LBS
FM-XP3030	CROSSOVER PLATE, 3-1/2" O.D. PIPE TO 3-1/2" O.D. PIPE	8.38 LBS
FM-XP3040	CROSSOVER PLATE, 3-1/2" O.D. PIPE TO 4-1/2" O.D. PIPE	13.88 LBS
FM-XP4040	CROSSOVER PLATE, 4-1/2" O.D. PIPE TO 4-1/2" O.D. PIPE	14.15 LBS

NOTES:
1. ALL METRIC DIMENSIONS ARE IN BRACKETS.
2. STAMP PART IDENTIFICATION NUMBER.

These drawings and specifications are the proprietary property of WANHO Manufacturing, LLC and may be used only for the specific purpose authorized in writing by WANHO Manufacturing, LLC.

ALL DIMENSIONS ARE IN INCHES U.O.S.
TOLERANCES UNLESS OTHERWISE SPECIFIED:
.X = ± .06 ANGLES ±2°
.XX = ± .03 FRACTIONS ±1/32
.XXX= ± .010
REMOVE BURRS AND BREAK EDGES .005

DO NOT SCALE THIS PRINT

DRAWN BY: ACG	SHEET: 1 of 1	PART NUMBER: FM-XP Series	
CHECKED BY: CC	SCALE: NTS	DESCRIPTION: CROSSOVER PLATE SERIES	
DATE: 08/29/18	MATERIAL: ASTM A36	DRAWING TYPE: ASSEMBLY DRAWING	
REVISION: A	FINISH: ASTM A123	FIMO	
	WEIGHT: SEE TABLE		